TECHNICAL DATA SHEET / EN

GRIP–W

Wall-type indicator post

A mechanical wall-mounted unit for operating a compatible shut-off valve from outside a building. Visible OPEN/SHUT targets allow personnel to check the valve position at the operating point.

The handwheel transfers rotation through the drive rod to the valve. The target mechanism tracks the valve's movement when correctly adjusted.



01 Technical parameters

Parameter	Value / condition
Working pressure	Not applicable
Connection	Mechanical

For fire-protection risers and other suitable through-wall arrangements. Choose the rod length for the actual installation; the eye and bracket provide attachment points for a chain and padlock.

02 Certification and scope

Document	Number	Scope
FM Approvals	PR474502	Model Grip-W

Approval applies to the stated model and device configuration. It does not automatically cover other variants or associated components.

03 Main component materials

Component	Material / construction
Base, body, operating nut, top cover and handwheel	Cast iron HT200
Operating stem	Carbon steel #45
OPEN/SHUT targets	Aluminium alloy
Positioning bracket and window fastening screws	Stainless steel 304
Window frame	Steel A283 Gr.C
Window	Organic glass
Window gasket	EPDM

04 Selection and compatibility

Check the compatible valve's mounting flange, operating nut, direction of opening and number of turns. Select the drive length for the actual installation. A visually similar valve or matching nominal size does not establish compatibility.

05 Installation and checks

Qualified personnel must adjust the targets against the actual valve: SHUT when fully closed and OPEN when fully open. Check the indication in every window over a complete operating cycle, refit the cover and verify free movement and the locking arrangement.

06 Operation and maintenance

Inspect secure mounting, unobstructed movement, readable windows, correct correspondence with the valve position and any lock or seal. Use replacement parts suitable for the exact construction.

Application limitations

The post does not retain water pressure and is not an independent shut-off valve. It does not replace required electrical supervision. Test torque values are not allowable operating torques; a water-spray test is not an IP rating.

07 Ordering information

Variant	Mercatura code
Grip-W	M-IPW

Specify finish, gasket and required approval scope with the variant identifier. The identifier alone does not establish these attributes.

08 Dimensional drawing

Dimensions in mm. Section and references follow the original Mercatura drawing.

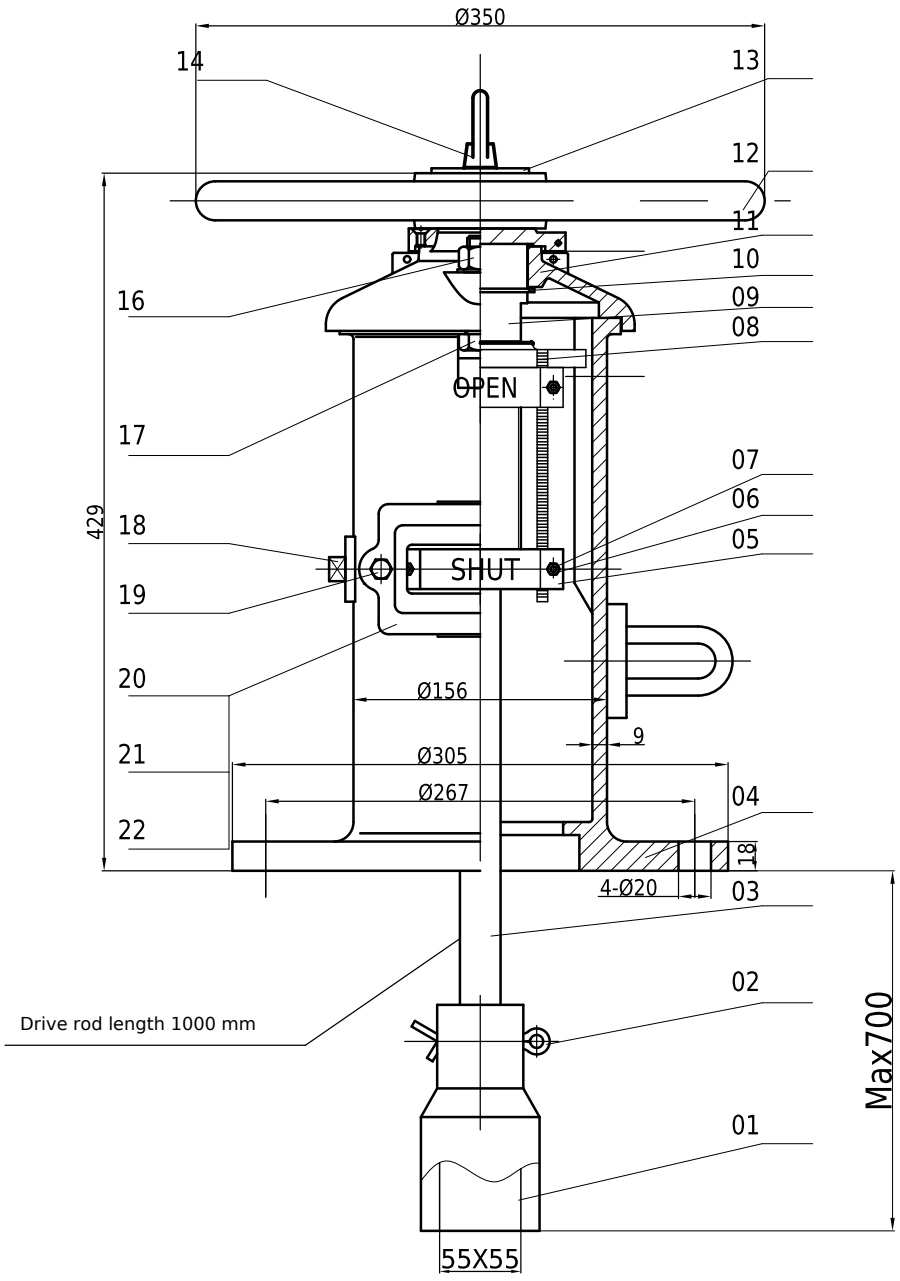

Mounting dimensions

Handwheel	**Ø350**
Mounting flange	**Ø305**
Bolt circle	**Ø267**
Mounting holes	**4 × Ø20**
Drive rod length	**1000**
Drive extension	**max. 700**
Square connection	**55 × 55**

OPEN and SHUT identify valve position. Original item numbers are retained. Select lengths to suit the actual installation and compatible gate valve.

Source: original Mercatura Grip-W assembly drawing. Do not derive dimensions by scaling the drawing.